C3D Labs

C3D Toolkit

The Most Complete Solution for Developers Creating Innovative 3D Software

c3dlabs.com

LIKE YOU, WE ARE SOFTWARE DEVELOPERS

C3D Labs comes from the founders of ASCON Group, who got their start when they decided to develop a new mechanical design system, now known as KOMPAS-3D. To power the new software, the company established in 1995 a team to write from scratch a geometric modeling kernel. The aim was to make it good enough to compete internationally with other commercially-available kernels. Over the next years, ASCON kept improving its 3D software in line with the needs of the architectural and machine design industries in Europe and Asia.

In 2012, ASCON Group spun off the geometric modeling division as a separate company, named C3D Labs. Its task was to adapt the 3D kernel as a software development kit by turning it into a standalone product and then introducing it to the international market. The resulting SDK, named C3D Toolkit, embodies the achievements of the Russian school of mathematics, coupled with more than 20 years of experience in creating technologically advanced CAD (computer-aided design) components.

Today, C3D Labs works closely with customers as they develop projects based on our C3D Toolkit. The company is especially known for offering flexible licensing terms that take into account the unique business models of each 3D software developers:

- Commercial license for vendors
- Special terms for startups
- Corporate license for enterprises
- Educational program for universities

ALL COMPONENTS FOR 3D SOFTWARE IN A SINGLE SDK

C3D Toolkit is today the only SDK to incorporate all four modules critical to writing 3D software: geometric modeling, constraint solving, data visualization, and file conversion. Each can be used stand-alone, or else together as a whole.

Our solution boasts a set of powerful functions for designing 3D bodies of virtually any shape and complexity. This makes the toolkit suitable for undergirding the functions you need for CAD, computer-aided engineering (CAE), computer-aided manufacturing (CAM), and other engineering software systems.

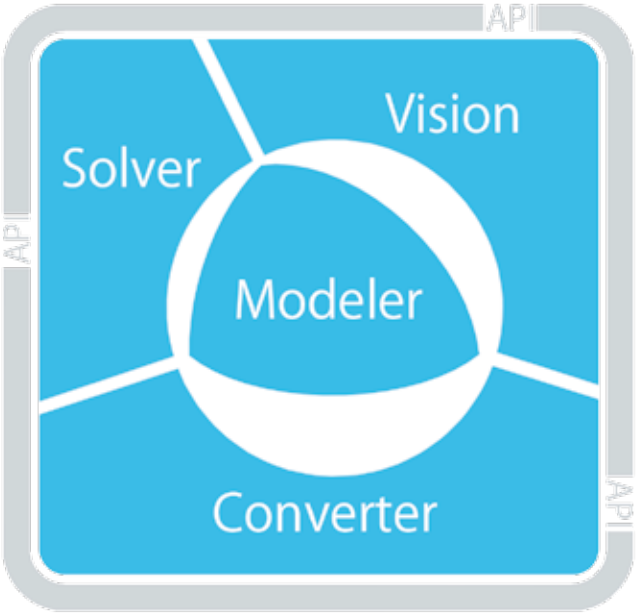

OUR C3D TOOLKIT BENEFITS APPLICATION DEVELOPERS :

- Quickly creates 3D systems based on existing 2D products
- Improves the reliability and speed of design software
- Enhances the capabilities of software programs
- Significantly reduces the cost of development

The C3D Toolkit comprises of a dynamic-link library, a demo application complete with source code, full technical documentation, a user manual, and support files for compatibility with popular integrated development environments. See the table below.

DEVELOPMENT PLATFORMS

TARGETS	ENVIRONMENTS	LANGUAGES
Windows	Windows: MS Visual Studio	C++
MacOS	MacOS: Clang	C#
Linux	Linux: Clang / GCC	JavaScript
Android	Android NDK: GCC	
iOS	iOS: Clang	
Web	Web: Emscripten	

C3D MODELER:

BUILDING COMPLEX 2D/3D MODELS THE EASY WAY

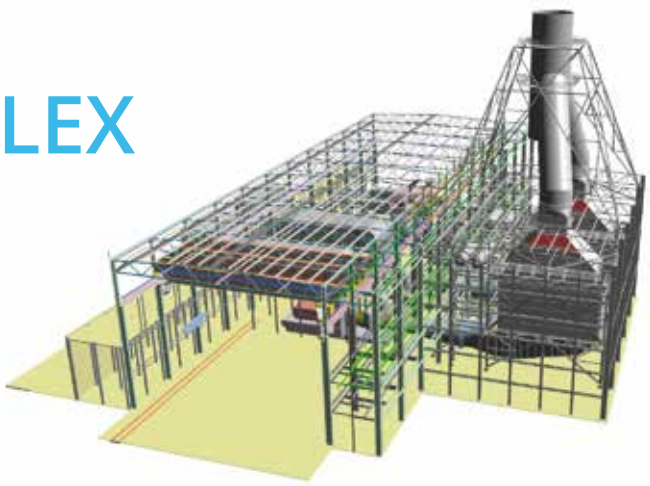

C3D Modeler is a geometric modeling kernel. It is used by software developers to implement efficient modeling methods in their applications. It performs all calculations necessary to construct 2D sketches and 3D models of nearly any shape imaginable.

Our modeler uses the boundary representation (b-rep) method to define shapes and construct 3D models. It also can compose 3D bodies from surfaces and curves, and then group them into fundamental building blocks in advance of creating complex assemblies.

The modeler also supports polygonal representations of geometric models. They are convenient for calculating mass properties and generating visualizations.

Users can easily move, rotate, and zoom any element in the geometric model.

C3D Modeler for Teigha®

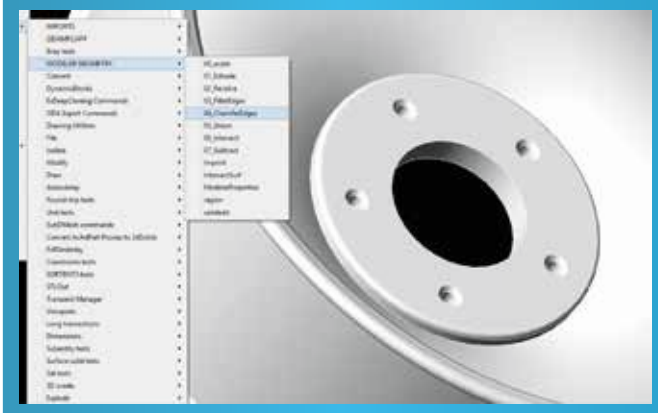

The Open Design Alliance provides a version of our C3D Modeler to its members, who can license and integrate it easily. C3D Modeler for Teigha is a lightweight version of the full-featured C3D Modeler. It integrates directly into the Teigha Platform, allowing ODA members to access solid modeling functions using Teigha's standard "OdDb3DSolid" API call.

If you would like to evaluate or purchase C3D Modeler for Teigha, please go to the Teigha Marketplace at www.opendesign.com.

C3D Modeler is best at the following applications:

- Wireframe modeling
- Surface modeling
- Solid modeling
- Sheet metal modeling
- Direct modeling
- Hybrid modeling

C3D Modeler supplies these surfaces and curves:

- Direct edits
- Fillet and chamfers
- Booleans
- Sections and cuts
- Shells with drafted faces
- Thin-walled solids
- Symmetry
- Bends
- Louvers
- Reinforcing ribs
- Stamping

C3D Modeler generates the following calculations from geometry:

- Calculates surface areas, volumes, and properties of mass inertia
- Casts planar projections
- Generates surface triangulations
- Detects collisions

C3D SOLVER:

APPLYING DIMENSIONS & CONSTRAINTS PRECISELY

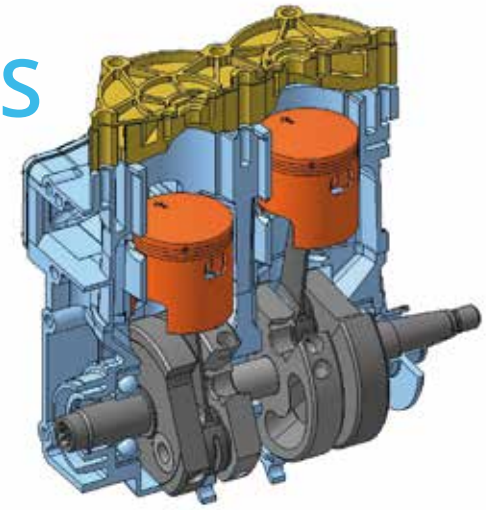

C3D Solver is a parametric modeling kernel. Developers use it to incorporate dimensions and 2D and 3D constraints in their software to create connections between geometry. The solver efficiently maintains constraints when users make changes to the geometry.

C3D Solver is necessary for these tasks:

- Constraining 2D parametric sketches with managed dimensions
- Positioning bodies in 3D assemblies using mates and dimensions
- Rebuilding changed models while keeping previously defined mates intact
- Modeling planar and spatial mechanisms

C3D Solver supplies the following 2D and 3D logical constraints:

Coincidence
Fixed geometry
Parallelism
Perpendicularity
Reflected symmetry
Tangency

Alignment (2D only)
Equal length (2D only)
Equal radii (2D only)
Fixed length and redirection (2D only)
Fixed spline derivatives (2D only)
Horizontal position (2D only)
Incidence (2D only)
Point on a curve (2D only)
Vertical position (2D only)

Black-box dependencies (3D only)
Cam mechanisms (3D only)
Coaxiality (3D only)
Mechanical transmissions (3D only)
Rack and gear mechanisms (3D only)

C3D Solver provides the following 2D and 3D dimensional constraints:

Angles between lines and planes
Distances
Specified distances (2D only)
Radii (2D only)

C3D Solver also supplies these functions in 2D and 3D:

Creating and solving parametric constraints
Manipulating geometry
Dragging geometry
Satisfying constraints
Analyzing degrees of freedom (2D only)
Clustering rigid sets (3D only)
Journaling API calls

C3D Solver for JavaScript

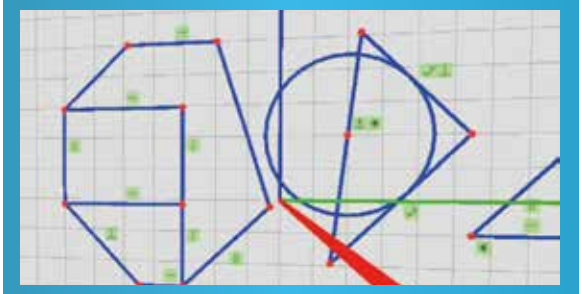

One of the latest trends in the IT industry is to migrate technology to the cloud. We took this trend seriously by developing the C3D Solver for JavaScript. This solution is unique in the industry, because any software based on it can be launched in a browser and, more importantly, perform mathematical calculations on the client side.

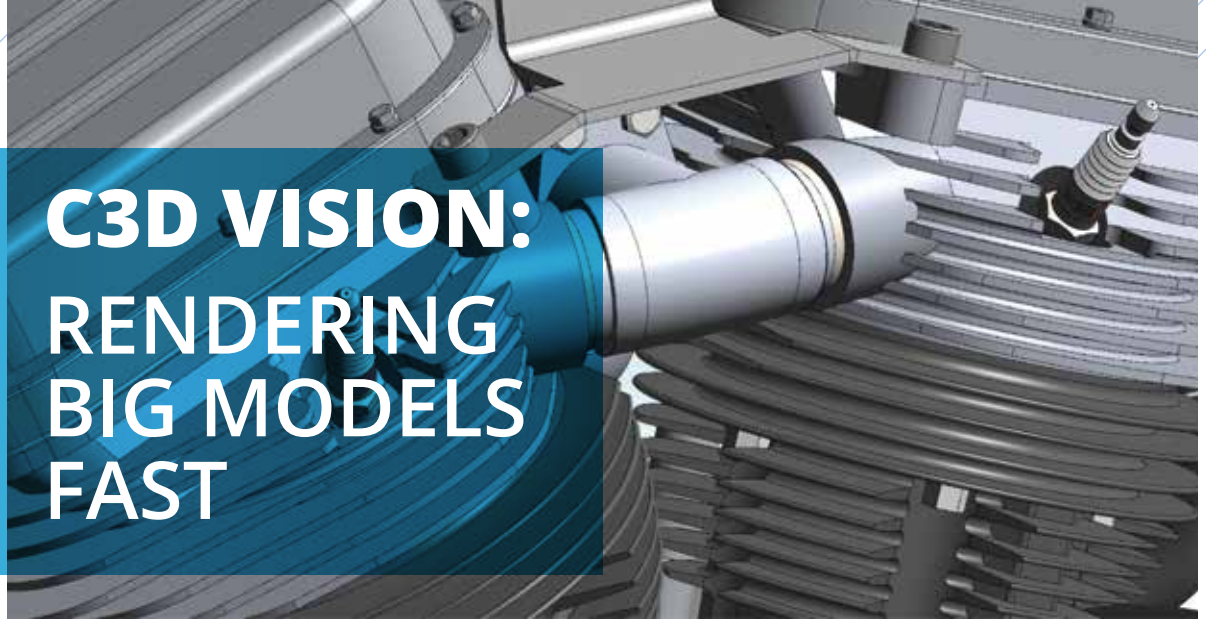

C3D VISION: RENDERING BIG MODELS FAST

C3D Vision is a visualization module. It is used by developers to customize the graphical user interface of their software applications and set parameters for visualization 3D models. This module improves the visualization capabilities of engineering software significantly by increasing the quality of 3D model rendering and speeding the processing of large assemblies.

C3D Vision opens up new opportunities for managing 3D scenes and animations. Its ready-to-use feature manager offers a design tree for 3D models, scene graphs, and interactive scene manipulation.

Scene control is performed by a graph divided into segments, each of which has its own properties:

- Absolute and relative matrices
- Reference representations
- Hierarchical representations

C3D Vision maximizes the performance of static graphics with these functions:

- Setting levels of detail (LOD)
- Controlling accuracy of triangulating grid calculations

C3D Vision supplies the following shaders:

- Object sampling
- Shadow rendering
- Mirroring

C3D Vision provides much needed flexibility for dynamic scenes:

- Hiding edges when rotating 3D models
- Anti-aliasing polygons
- Removing minor elements of scenes
- Deleting elements outside scenes
- Synchronizing the screen refresh rate's vertical sync with the scene update frequency
- Speeding up visual computing through hardware acceleration

C3D Vision is ideal for these applications:

- Processing large amounts of data generated by 3D models
- Preventing the loss of rendering quality when scaling 3D models
- Solving problems related to the lack of visualization for dynamics
- Optimizing visualizations directly in computational nodes
- Making efficient use of hardware for visualization
- Enabling the effective use of multiprocessor-workstations for visualization
- Solving problems from supporting multiple video graphic adapters

C3D Vision controls the rendering quality of 3D models by using mathematical techniques and software, as well as the workstation's hardware.

C3D CONVERTER:

EXCHANGING 3D DATA ACCURATELY

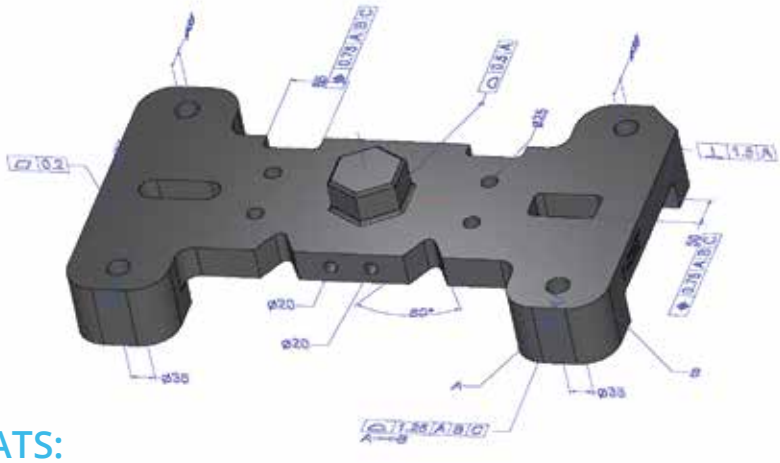

C3D Converter is a data exchange module. It is used by developers to import geometry and related data, and then to export them to other systems easily. The converter reads and writes 3D models in a variety of neutral and proprietary formats.

OUR CONVERTER READS/WRITES FILES IN THE FOLLOWING FORMATS:

B-REP MODELS

STEP (AP203, AP214, AP242)
IGES
SAT
X_T, X_B
C3D
JT

POLYGONAL MODELS

STL
VRML
JT

The comprehensive data that can be passed via C3D Converter includes the following items:

- Shape data that describes bodies, surfaces, wireframes, and groups of points
- Model structure data that specifies components that can be reused in the model
- Item data, such as ID, comments, information about its author, and name
- Attribute data, including visual properties and elementary attributes
- Annotation data like dimensions, tolerances, technical specifications, and designations

C3D Converter adjusts the accuracy of exported STL models by these triangulation parameters:

- Maximum deflection
- Maximum angle of a normal curve or surface
- Maximum length of triangle edges

When it comes to JT format, the converter supports these properties:

- Product and manufacturing information (PMI)
- Level of detail (LOD)
- Data compression
- Visual characteristics

C3D VIEWER:
READILY EMBEDS IN PLM PROCESS

C3D Viewer is an easy-to-use application for viewing 3D models from files in standard CAD data formats and then optionally saves them in other file formats. The viewer is based on our C3D Modeler, C3D Vision, and C3D Converter components.

Our C3D Viewer includes the following functions:

- Supports C3D, JT, STEP, X_T, X_B, SAT, IGES, STL, and VRML files
- Opens more than one file in a session
- Navigates standard views
- Renders in a variety of modes
- Controls render quality
- Sets performance options
- Saves scenes in raster formats, such as JPEG, TIFF, BMP, and PNG

Three levels of C3D Viewer are available:

C3D Viewer Lite opens all formats, writes only C3D format, and is a free download from our Website

C3D Viewer Pro opens and writes all supported formats, adds comments to 3D models, and plays animations

C3D Viewer Enterprise includes all Pro functions, plus works with applications through Active X

C3D Viewer is useful for preparing material based on 3D models, such as for advertising, marketing, visually assessing 3D design quality. It is ideal for those who do not need to edit 3D models, and for PDM systems that need an integrated viewer.

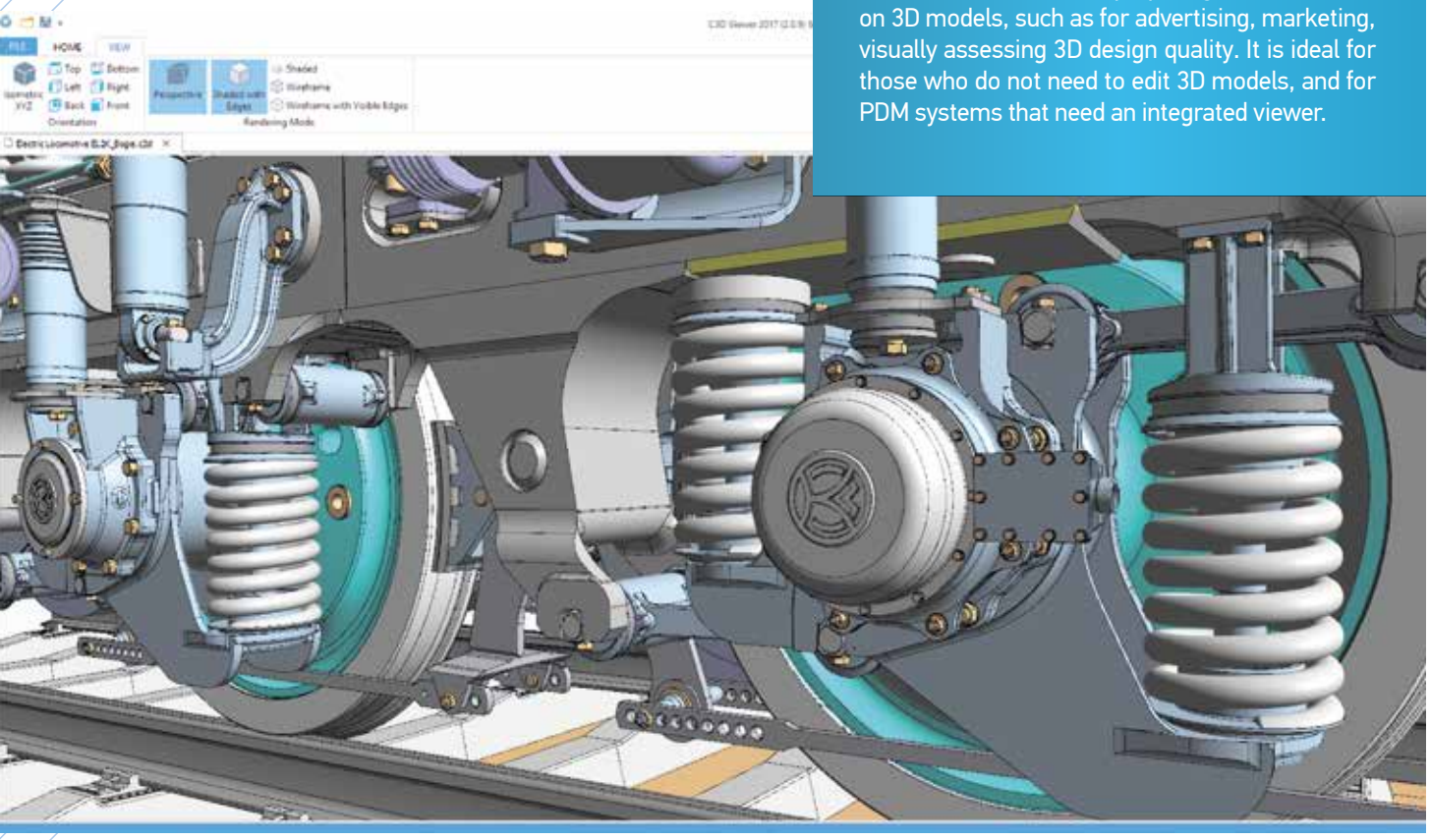

WHO USES THE C3D TOOLKIT

MECHANICAL DESIGN

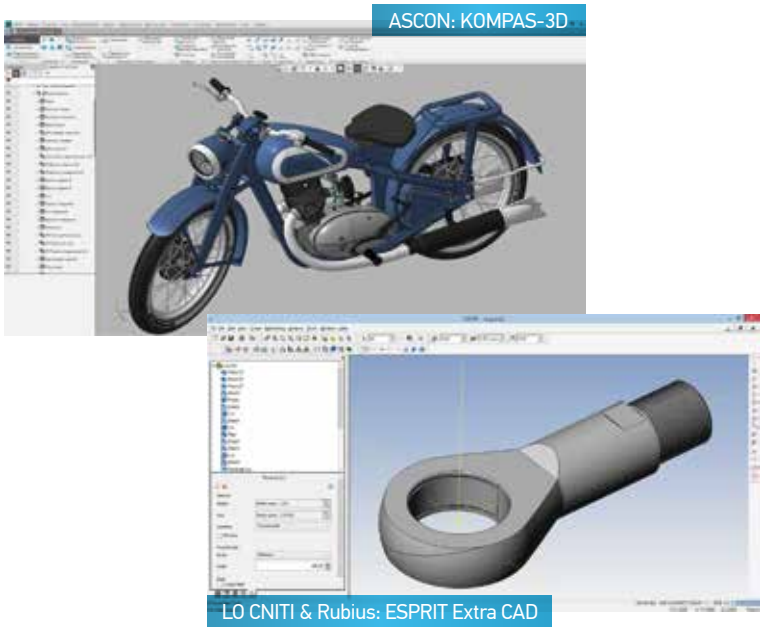

ASCON: KOMPAS-3D

LO CNITI & Rubius: ESPRIT Extra CAD

"We were among the first to work with C3D Labs' geometric modeling kernel," said **Andrey Lovygin**, CEO of LO CNITI and the Russian distributor of ESPRIT for DP Technology Corp. "In just four months, we embedded a full 3D solid modeler in a CAD application for ESPRIT CAM software. Our choice of C3D Modeler was driven by their flexible pricing policy and quality technical support. We found that the speed of response was an order of magnitude better than what we had experienced from other companies. After implementing it for this project, LO CNITI enjoyed a high level of assistance provided directly by software engineers from C3D Labs. I am confident that they will achieve excellent results on the international market!"

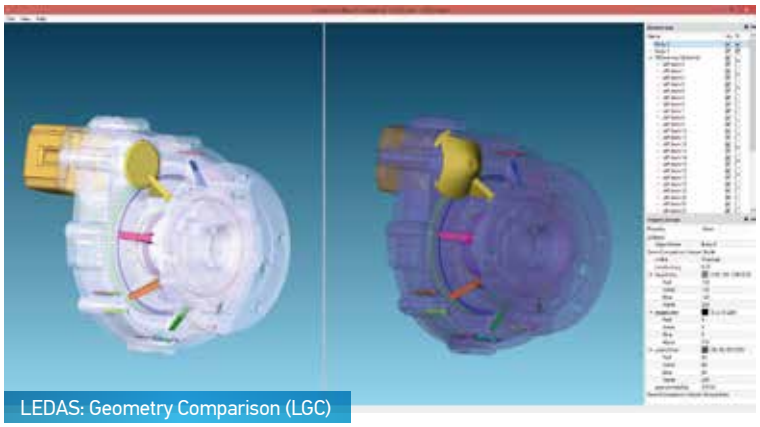

LEDAS: Geometry Comparison (LGC)

"We first became familiar with C3D Modeler when we began a joint project with ASCON Group aimed at integrating our LEDAS Variational Direct Modeling technology into KOMPAS-3D," said **Ivan Rykov**, CTO of LEDAS. "Our long experience in developing and using 3D modeling software makes it possible for us to easily identify the advantages and bottlenecks of any 3D modeling kernel. C3D Modeler made a really positive impression on us while we were testing it in our Geometric Comparison project, especially with regards to its stability and with the technical support from C3D Labs."

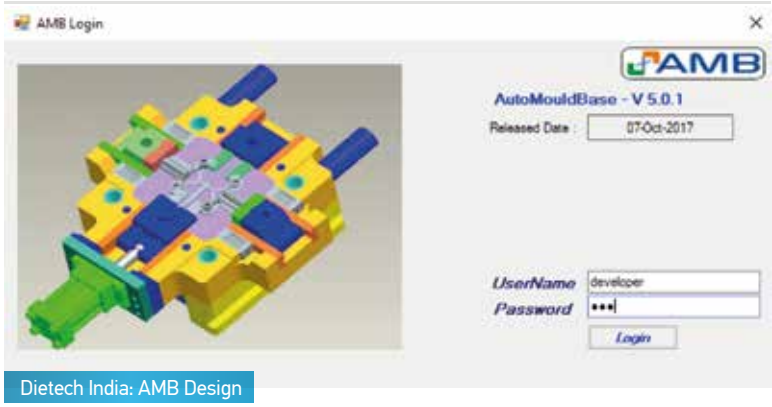

Dietech India: AMB Design

"As we specialize in developing innovative software at Dietech India, we recently licensed the C3D Toolkit," said **Srinivasan Natarajan,** Chief Product Consultant at Dietech India. "We found that the team of mathematicians and programmers in Russia to be highly professional. This became quite clear to us in the testing phase, and so gave us the assurance that we would receive the technical support we need to solve any issue related to the use of the software from C3D Labs."

WHO USES THE C3D TOOLKIT

ELECTRONIC DESIGN

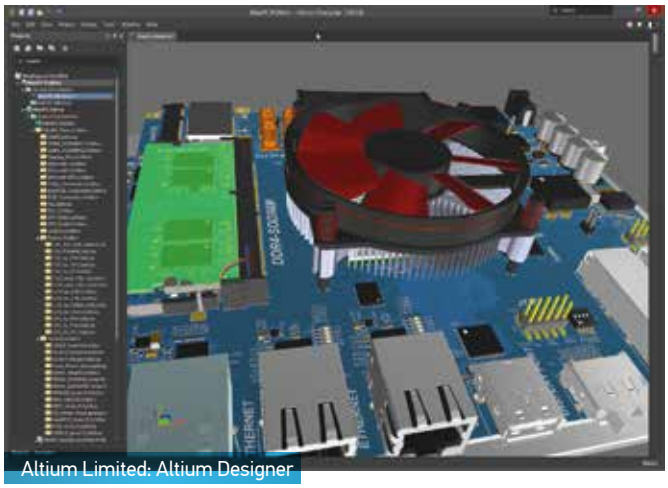

Altium Limited: Altium Designer

"Bringing true 3D design to PCB is key to breaking through the wall between the electronic and mechanical engineering disciplines," said **Sergey Kostinsky**, VP of Engineering at Altium. "We were first to bring 3D to PCB design and our partnership with C3D Labs ensures that Altium continues to lead the way in modern electronic design."

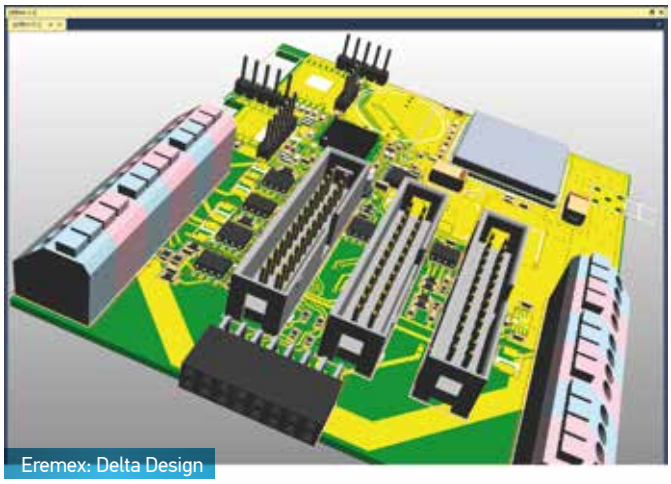

Eremex: Delta Design

"Three-dimensional design is the standard for all modern CAD systems, and electronic CAD is no exception. Adding the function to our product was a logical next step," said **Evgeniy Kornilyev**, Deputy CEO for Business Development at Eremex. "Implementing the C3D Toolkit opens up a wide range of new opportunities for us. In the case of Delta Design ECAD, it means designing flex-rigid PCBs, adjusting PCBs to adapt to the size of cases, preparing assembly drawings, and analyzing 3D models for their thermal and electromagnetic characteristics."

ARCHITECTURE, ENGINEERING & CONSTRUCTION

Renga Software: Renga Architecture/Structure/MEP

"Based on the capabilities of the C3D Toolkit, we decided to use C3D Modeler as our geometric kernel," said **Vladimir Zakharov**, Director of the AEC Division at ASCON Group. "Our demands were very specific and difficult to implement, but an effort by the C3D Labs team proved that our decision to collaborate with them was correct. We found that all the developers at C3D Labs are amazingly responsive and customer-oriented, and so we continue to work closely with them on future releases of the Renga software line."

CABINET, INTERIOR & WOODWORKING

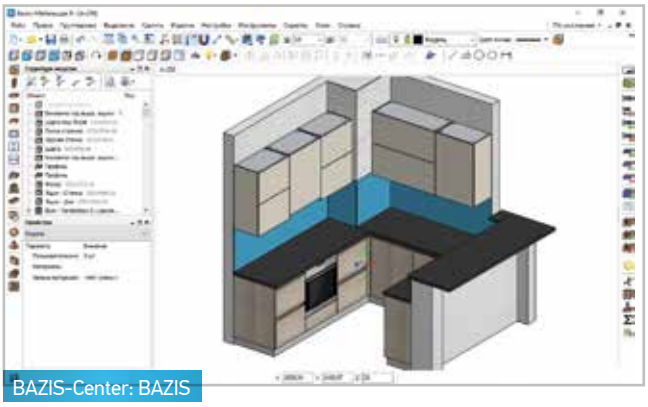

BAZIS-Center: BAZIS

"We conducted a thorough analysis of the geometric kernels on the market," said **Natalia Bakulina**, CEO of BAZIS-Center. "We used two criteria. Firstly, we looked for the one best at handling needs specific to cabinet design; and secondly, we looked for the kernel with the best combination of functionality, performance, and cost. After a six-month search, we concluded that our needs would best be fulfilled by the C3D Modeler. We look forward to our BAZIS system strengthening its leading position in the cabinet CAD segment through our collaboration with C3D Labs."

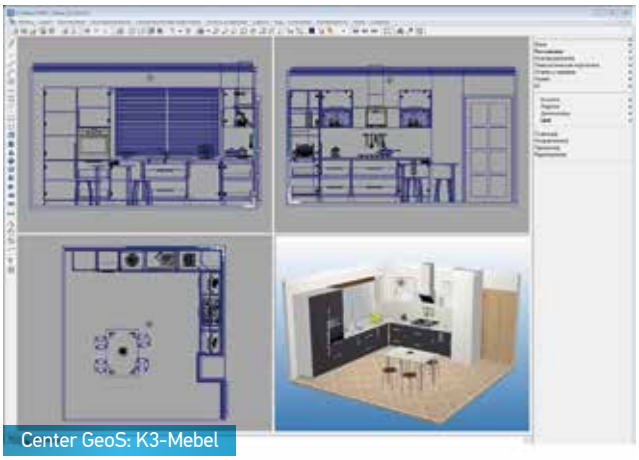

Center GeoS: K3-Mebel

"We have worked with ASCON for many years. Our partnership began in 1990, and continues successfully with them to this day," said **Sergey Labutin**, Director of GeoS Center. "I am confident that the C3D Solver parametric kernel will be of great interest to our customers, as it will provide them with added benefits in their cabinet design work. The geometric solver adds to our K3-Mebel software suite's list of competitive advantages."

MOBILE & CLOUD

BAZIS-Center: WebPlanner

ASCON: KOMPAS:24 Viewer

"We use the C3D Modeler with our desktop cabinet design software. Technology is constantly evolving, so we decided to improve our product by, among other things, allowing customers to operate BAZIS software over the Internet," said **Roman Kolesnikov**, Project Leader at BAZIS-Center. "The primary users of BAZIS system are companies that manufacture and sell furniture. We began to develop a completely new version of our CAD system that allows customers to design cabinet and other furniture quickly, and then submit it to the buyer in a beautiful format."

WHO USES THE C3D TOOLKIT

TEIGHA-BASED SOFTWARE

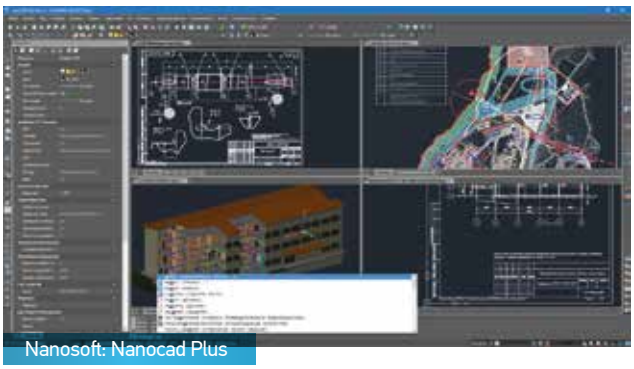

Nanosoft: Nanocad Plus

"It took us a while to sign the C3D Labs license agreement, but now with C3D Modeler integrated into the Teigha platform, we can with this kernel minimize the cost of developing our products that support *.dwg and *.dgn files directly," said **Dmitry Popov**, Product Launch Director at Nanosoft. "During the time that we tested the software, we established a relationship between our two companies, and so we are confident that this synergy will have a positive effect on the ongoing development of nanoCAD and C3D Modeler for Teigha."

MKA Software and Engineering Solutions: MKA Steel

"We are developing an application that lets users design single-storey steel structures," said **Ali Erol**, Senior Software Developer at MKA Software and Engineering Solutions. "To ensure that the metal parts can be successfully manufactured, a very precise, detailed parametric 3D model must be made as the basis for our production drawings. To create the 3D models, we needed a fast, reliable 3D kernel that can generate 2D drawings and export data to DWG. We examined some open-source software along with the full C3D Toolkit, but in the end, chose the combination of the Teigha platform for engineering drawings and C3D Modeler for solid geometry. We found that this solution satisfied our need."

CAE SOFTWARE

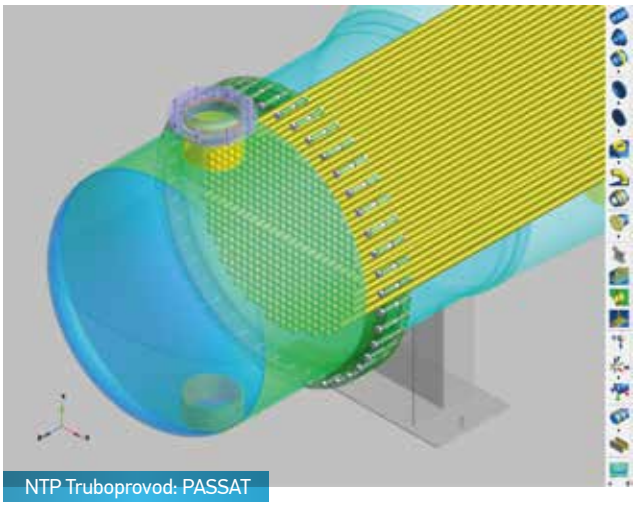

NTP Truboprovod: PASSAT

"Until now, we used a geometric kernel that in PASSAT that was quite simple, supporting only the most basic functions. We needed to develop advanced functions, but to do so on our own was for our small team an overly ambitious goal," said **Aleksey Timoshkin**, Head of the IT Department at NTP Truboprovod. "When we analyzed different 3D modeling libraries, our final choice came to C3D Modeler. It demonstrated excellent test results, because its core philosophy is close to that of PASSAT's. Now we are easily implementing new functions for modeling, as well as integrating them with other systems in our products. We believe that the availability of a high-tech product such as C3D Toolkit is a significant event for the entire industry."

CAM SOFTWARE

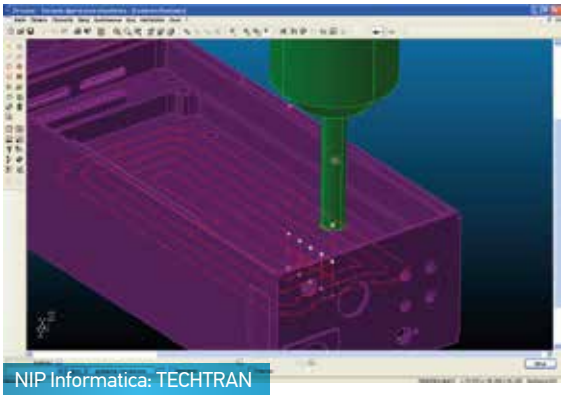

NIP Informatica: TECHTRAN

"Some time ago we began to notice that TECHTRAN customers wanted to directly access 3D models created by other designers," said **Yuri Romanchenko**, Lead Engineer at NIP-Informatica. "We thoroughly analyzed and considered many different modeling software packages on the market that were capable of importing data in popular 3D formats, and finally decided on the toolkit from C3D Labs. Among its many powerful features, we especially have praise for its affordable price, time-proven quality, and direct support from the developers."

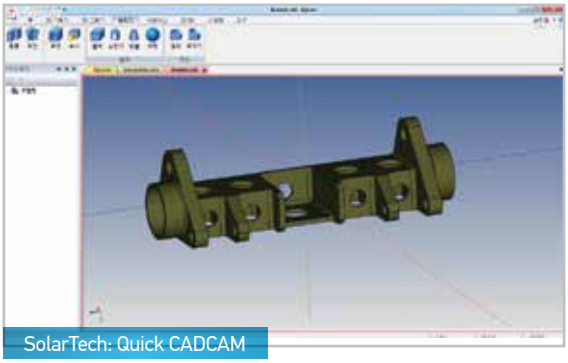

SolarTech: Quick CADCAM

"When working on the new generation of Quick CADCAM, we had an ambitious task: transition from 2D to 3D," said **Seung-Woo Lee**, CEO of Solar Tech. "For this reason, we decided to use the C3D Toolkit. Our trial operations with C3D Modeler showed us that it is a high-performance geometric kernel, with many features that fully meet the requirements of our development team."

ENTERPRISE SOFTWARE

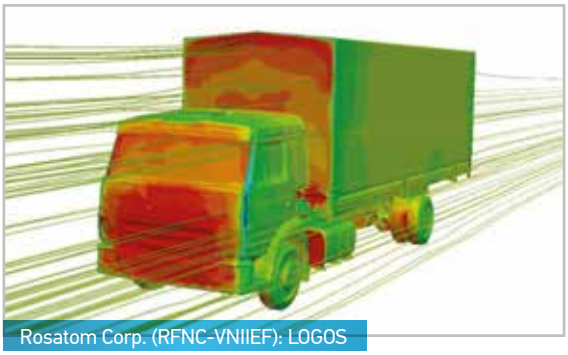

Rosatom Corp. (RFNC-VNIIEF): LOGOS

"After a selection procedure that thoroughly tested the contenders among available geometric kernels, the engineers at VNIIEF decided in favor of the C3D Modeler," said **Valery Budnikov**, Department Head at VNIIEF. "The technology will be used by our research institute to develop software that computes simulations of a variety of physical processes. We look forward to using the C3D Modeler to build computational meshes for 3D models, and for simplifying, adjusting, and improving the computational geometry. Our collaboration has proven to be productive for both teams."

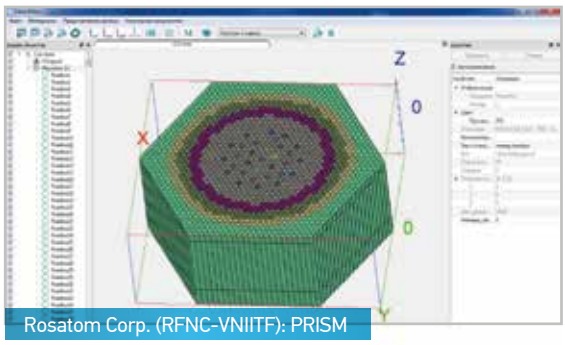

Rosatom Corp. (RFNC-VNIITF): PRISM

"For a long time, we relied on open-source components to develop our proprietary engineering software," said **Igor Pavlov**, Head of the Software Development Department at VNIITF. "We were, however, never satisfied with it, be it in terms of performance or functionality. We had been eyeing the C3D Modeler for some time, and so conducted a major testing cycle, which proved that the C3D geometric kernel was indeed a component that would be reliable and fast enough for our needs."

PRODUCT DATA MANAGEMENT

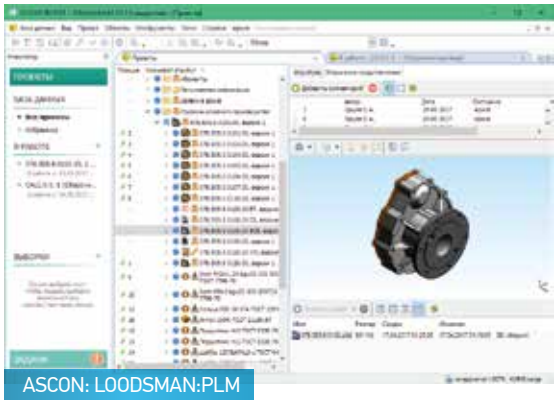
ASCON: LOODSMAN:PLM

"While developing the LOODSMAN:PLM system, we are constantly expanding its functionality and increasing performance and reliability", said **Pavel Grigoriev**, Product Owner of LOODSMAN:PLM at ASCON Group. "The new release required us to implement functionality for viewing and annotating 3D models. Following detailed research, we chose C3D technologies. This enabled us to greatly speed up the generation of secondary representation of 3D models, significantly reduce the size of files, reduce network bandwidth consumption, mitigate the requirements for disk space, and increase the speed of data uploading and display. These major enhancements have helped us improve the efficiency and usability of our software."

UNIVERSITIES AND RESEARCH CENTERS

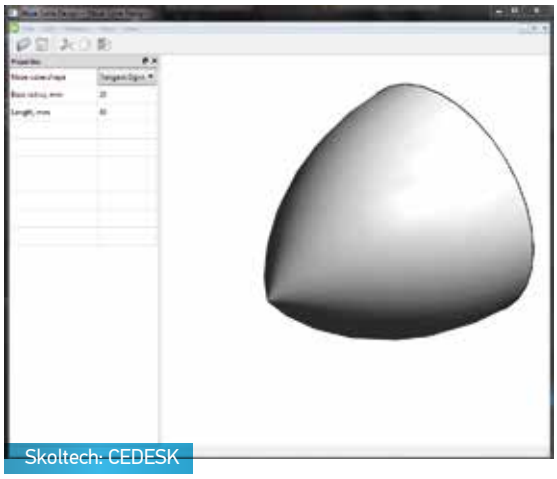
Skoltech: CEDESK

"I became engrossed in computer 3D modeling during my studies at Bauman Moscow State Technical University," said **Nikita Letov** on his experience. "For my Master's thesis research at Skoltech, I'm involved in developing a virtual environment for manufacturing processes, from concurrent engineering to a fully developed digital factory. I needed to find an effective visualization tool and so I considered and tested many options, even open-source software. The most suitable one turned out to be the C3D Toolkit. A lot of factors supported this decision, such as C3D's ability to represent complex geometry, a cross-platform development environment, and the availability of university program. It is interesting that the Skoltech summer internship is called Summer Immersion, as I really was immersed in the working process at C3D Labs in Kolomna. Starting with the architected design of a future application and ending with the development of a fully developed application, I was guided by C3D Labs' employees. With their professional help and deep experience, I really learned a lot."

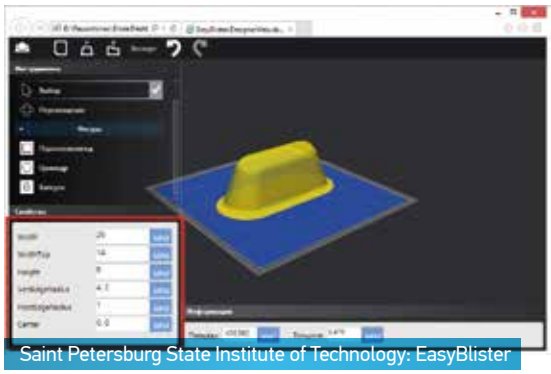
Saint Petersburg State Institute of Technology: EasyBlister

"Thanks to the C3D Toolkit, we can implement various projects regarding all disciplines and research areas in which our institute operates," said **Eugene Tyan**, Professor at the Saint Petersburg State Institute of Technology. "What is important to us is that we are not locked to a specific CAD vendor. Our students obtain a unique opportunity to play with the C3D geometric kernel and so create their own simplified, non-commercial CAD software. I consider this to be a great option for the entire educational process, because these R&D projects help our students understand the basic principles of CAD in greater depth."

LOOKING TO OUTSOURCE DEVELOPMENT OR FOR PRESALE ADVICE?

FIND YOUR NEAREST PARTNER HERE

Parent Company,
Reseller for Russia and CIS
Phone: +7 812 703-3934
Fax: +7 812 703-3934
E-mail: contact@ascon.net

Distributor of
C3D Modeler for Teigha
Phone: +1 602 263-7666
Fax: +1 602 263-7666
E-mail: admin@opendesign.com

C3D Labs is a resident of the Skolkovo Innovation Center.

Authorized Developer
Phone: +7 383 335-6504
Fax: +7 383 335-6256
E-mail: info@ledas.com

Authorized Developer
Phone: +7 3822 977-772
Fax: +7 3822 994-349
E-mail: info@rubius.com

Reseller for
Korea, China, and Japan
Phone: +82 2 1661-3215
Fax: +82 2 6919-2532
E-mail: sales@cadcam1.co.kr

Authorized Developer
Phone: +91 20 4674-3334
Fax: +91 20 4674-3334
E-mail: info@prototechsolutions.com

FOLLOW US ON SOCIAL MEDIA FOR NEWS, VIDEOS, AND UPDATES:

- linkedin.com/company/c3d-labs
- facebook.com/C3Dlabs
- twitter.com/C3Dlabs
- youtube.com/C3Dlabs

CONTACT US

C3D Labs, LLC
Beta Business Center, Office 112
1 Altufevskoye Shosse, Moscow,
127106 Russia

Phone: +7 495 783-2559
Email: info@c3dlabs.com
For more information on C3D Labs, visit c3dlabs.com